IOWA DEPARTMENT OF NATURAL RESOURCES **ADDENDUM No. 2**
LAND AND WATERS BUREAU
WALLACE STATE OFFICE BUILDING

LAKE MIAMI WMA
SEDIMENT PONDS
MONROE COUNTY, IOWA
PROJECT NUMBER: 15-05-68-01

August 5, 2016

This Addendum is issued to modify, explain or correct the original Drawings and Specifications, and is hereby made a part of the Contract Documents. Please attach this Addendum to the Project Manual in your possession. Insert the number and issue date of this Addendum in the blank space provided on the Proposal Form.

PLAN REISSUE: An incorrect set of plans was available for download from the DNR website between July 29, 2016 and August 1, 2016. Plans downloaded after August 1st or plans received from Beeline and Blue are the correct set. Attached to this addendum is the correct set of plans.

SPECIFICATIONS

A. 00300 – PROPOSAL – The bid quantities on the proposal have been updated. Use the attached proposal for bidding.
B. 00811 – SUPPLEMENTARY COVENANTS AND PROVISIONS – Disregard section 5.07 – Construction Stakes and Benchmarks. DNR will provide construction staking for this project.
C. IA-64 LOOSE ROCK RIPRAP – Riprap gradation shall meet Class D Revetment as specified in the IDOT Standard Specifications for Highway and Bridge Construction, Series 2015.

IOWA DEPARTMENT OF NATURAL RESOURCES

CONSTRUCTION DOCUMENTS FOR SEDIMENTATION PONDS AT LAKE MIAMI

MONROE COUNTY, IOWA

PROJECT # 15-05-68-01

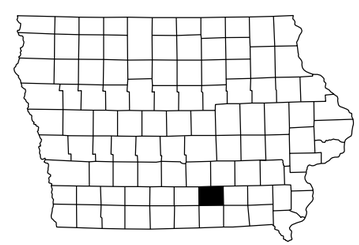

SHEET INDEX

A.01	COVER SHEET
A.02	LOCATION MAP
B.01	TRASH RACK DETAIL
B.02	ROCK CHECK DAM DETAIL
C.01	QUANTITIES AND GENERAL INFORMATION
D.01	OVERALL SITE PLAN
D.02	POND 1 CROSS SECTION
D.03	POND 1 PLAN AND PROFILE
D.04	TERRACE PLAN AND PROFILE
D.05	POND 3 CROSS SECTION
D.06	POND 3 PLAN AND PROFILE
D.07	POND 4 CROSS SECTION
D.08	POND 4 PLAN AND PROFILE
D.09	POND 5 CROSS SECTION
D.10	POND 5 PLAN AND PROFILE
D.11	SITE 6

DIRECTORY

PROJECT MANAGER		CONSTRUCTION INSPECTOR	
COMPANY	IOWA DEPARTMENT OF NATURAL RESOURCES	COMPANY	IOWA DEPARTMENT OF NATURAL RESOURCES
ADDRESS	502 EAST 9TH STREET	ADDRESS	
CITY,STATE,ZIP	DES MOINES, IA, 50319	CITY,STATE,ZIP	
CONTACT	"MIKE" SHAHID HAMEED	CONTACT	JASON KRUSE
TELEPHONE	515-725-8467	TELEPHONE	515-250-3707
FAX		FAX	
EMAIL	mike.hameed@dnr.iowa.gov	EMAIL	jason.kruse@dnr.iowa.gov

PROJECT DESCRIPTION

THIS PROJECT CONSISTS OF CONSTRUCTING VARIOUS SEDIMENT CONTROL STRUCTURES

AUTHORIZATION TO BID

AUTHORIZATION - PARKS | WILDLIFE | FISHERIES | LAW ENFORCEMENT | FORESTRY DATE

ENGINEERING BUREAU CHIEF DATE

CONSULTANT:

IOWA DEPARTMENT OF NATURAL RESOURCES

ENGINEERING SERVICES - WALLACE BUILDING
502 E. 9TH ST., DES MOINES, IA 50319-0034

COVER SHEET

SEDIMENTATION PONDS AT:
LAKE MIAMI WMA

MONROE COUNTY

NO.	BY / DATE	REVISION

DRAWN BY:

PROJECT NUMBER: 15-05-68-01

CHK'D BY:

DATE:

SHEET No: A.01

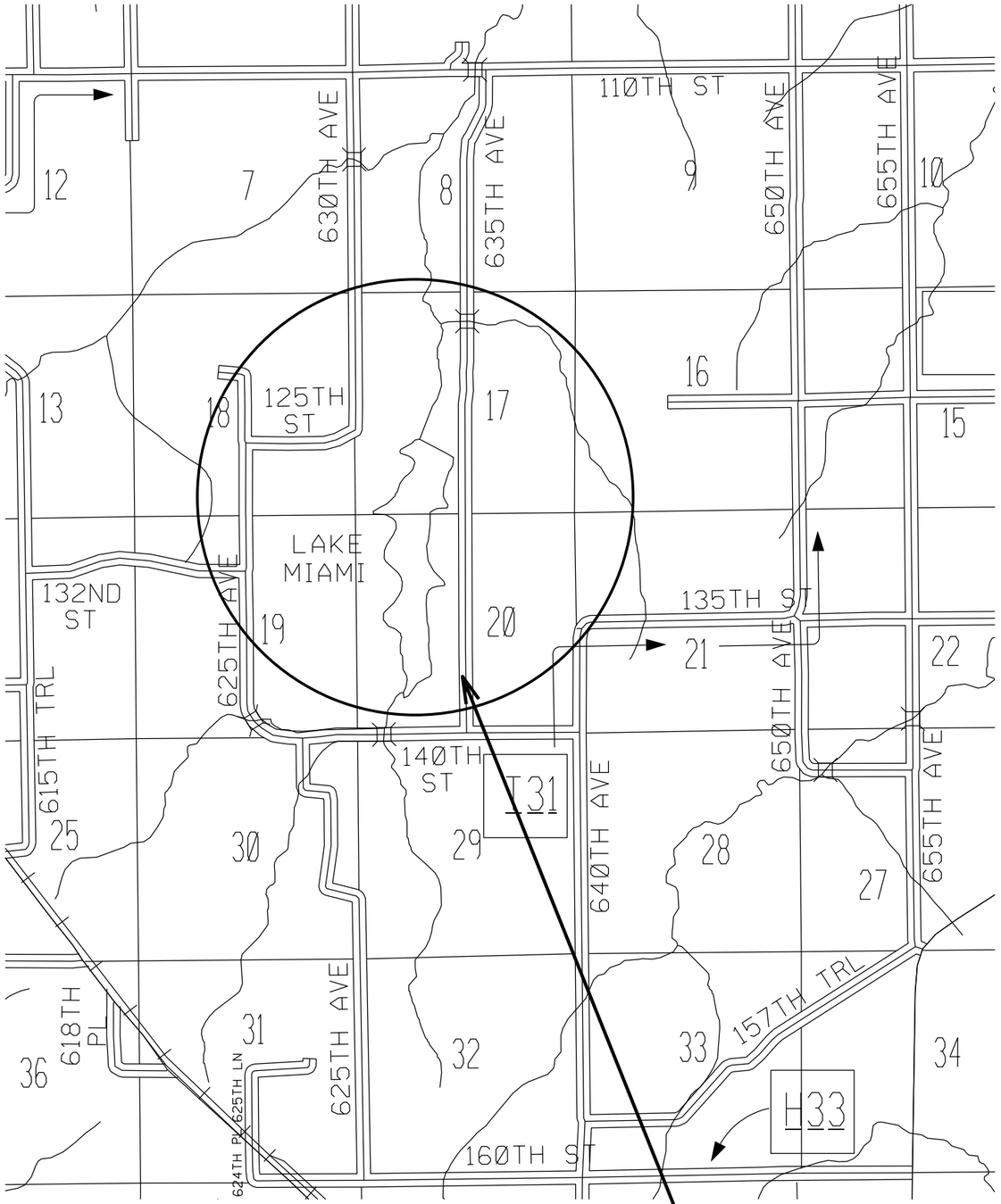

Miami Lake Wildlife Management Area

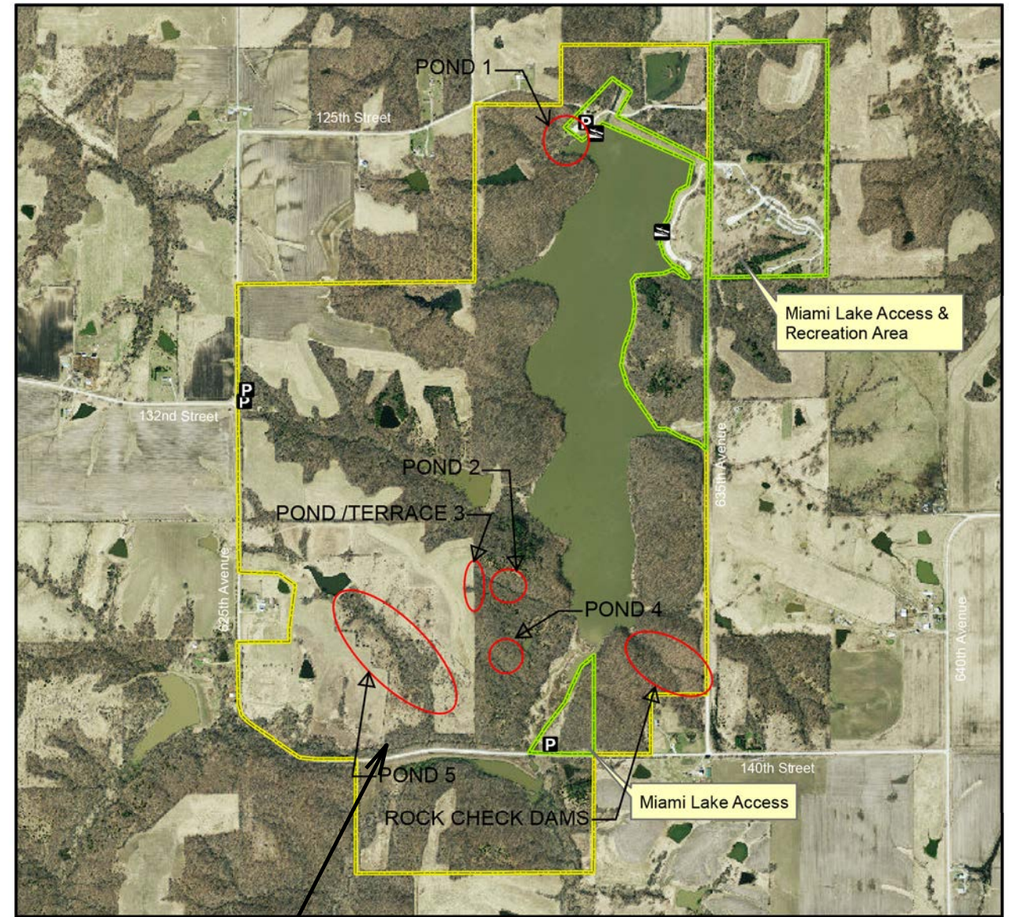

Legend

State Areas open to hunting
- WMA Boundary
- Parking Lot
- Boat Ramp
- Other Public Land

2009 Aerial Photography

Map Creation Date: 8/2012

N

Miles 0 0.1 0.2

Acres: 771

Habitat: 1/4 Lake, 1/4 Upland, 1/2 Timber

Species: Deer, Turkey, Rabbit, Quail, Dove

Contact: Jeff Telleen
Rathbun Wildlife Unit
641-414-1513

Monroe County, Iowa
T-73N, R-17W,
Sections 17,19-20,29-30

Directions: 2 miles N of Albia on Hwy 137, 1.5 miles W on H33, 2 miles N on T31, 0.5 mile W and 1.5 miles N on gravel.

Every effort has been made to accurately depict the boundaries on this map. However, users should rely on boundary signs actually located in this area to ensure they do not trespass on private property.

CONSULTANT:

IOWA DEPARTMENT OF NATURAL RESOURCES

ENGINEERING SERVICES - WALLACE BUILDING
502 E. 9TH ST., DES MOINES, IA 50319-0034

PROJECT LOCATION MAP

SEDIMENTATION PONDS AT:
LAKE MIAMI WMA

MONROE COUNTY

NO.	BY DATE	REVISION

DRAWN BY:
PROJECT NUMBER: 15-05-68-01
CHK'D BY:
DATE:
SHEET No: A.02

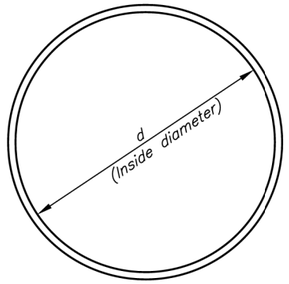

BENDING DIAGRAM FOR
ⓑ AND ⓒ RODS

TABLE OF DIMENSIONS AND QUANTITIES
CORRUGATED METAL PIPE

NPS	PIPE O.D.	APPROX. WEIGHT	ⓐ ROD SIZE	H	R	X	O	LENGTH	NUMBER REQUIRED	N	ⓑ ROD SIZE	d	LENGTH	NUMBER REQUIRED	ⓒ ROD SIZE	d	LENGTH	NUMBER REQUIRED	ⓓ ROD SIZE	d	LENGTH	NUMBER REQUIRED
IN.	IN.	LBS.	IN.	IN.	IN.	IN.	IN.	IN.		IN.	IN.	IN.	IN.		IN.	IN.	IN.		IN.	IN.	IN.	
6	6 5/8	18.9	3/8	9	4	6	9 1/2	33 1/2	14	4 1/8	3/8	17 1/8	53 3/4	3	--	--	--	0	2 X 1/4	7 3/8	14 5/8	2
8	8 5/8	22.3	3/8	11	4	6	10 1/2	36 1/2	10	6 1/2	3/8	19 1/8	60 1/8	3	--	--	--	0	2 X 1/4	9 3/8	17 3/4	2
10	10 5/8	24.7	3/8	13	5 1/2	6	12	40	10	7 1/8	3/8	21 1/8	66 3/8	3	--	--	--	0	2 X 1/4	11 3/8	20 7/8	2
12	13 1/8	27.1	3/8	15	5 1/2	6	13	43	10	7 7/8	3/8	23 5/8	74 1/4	3	--	--	--	0	2 X 1/4	13 7/8	24 3/4	2
15	16 1/8	48.4	1/2	18	6	6	14 1/2	47 1/2	10	8 7/8	1/2	26 1/8	82 1/8	3	1/2	11	34 1/2	1	2 X 1/4	17 1/8	29 7/8	2
18	19 1/8	52.4	1/2	22	8	9	19 1/2	59 1/2	12	9 3/4	1/2	35 1/8	110 3/8	3	1/2	14	44	1	2 X 1/4	20 1/8	34 5/8	2
21	22 1/8	69.5	5/8	25	8 1/2	9	21	64	12	10 1/2	5/8	37 5/8	118 1/4	3	5/8	17	53 3/8	1	2 X 1/4	23 3/8	39 3/4	2

Note: Weld ⓑ and ⓒ rods and ⓓ bars to ⓐ rods and weld ⓐ rods to 3" diam. Steel Plate.
16 Gage, 1/4" corrugations on 6" – 10" pipe.
16 Gage, 1/2" corrugationa on 12" – 21" pipe.
Rod and bar dimensions calculated from inside diameter and rounded to the nearest 1/8 inch.

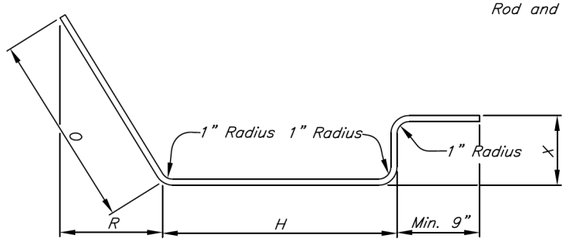

BENDING DIAGRAM FOR
ⓐ RODS

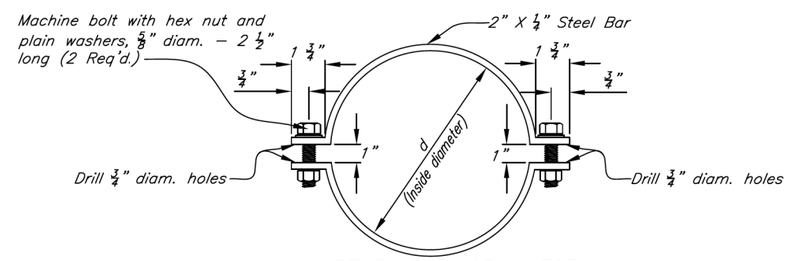

BENDING DIAGRAM FOR
ⓓ BARS

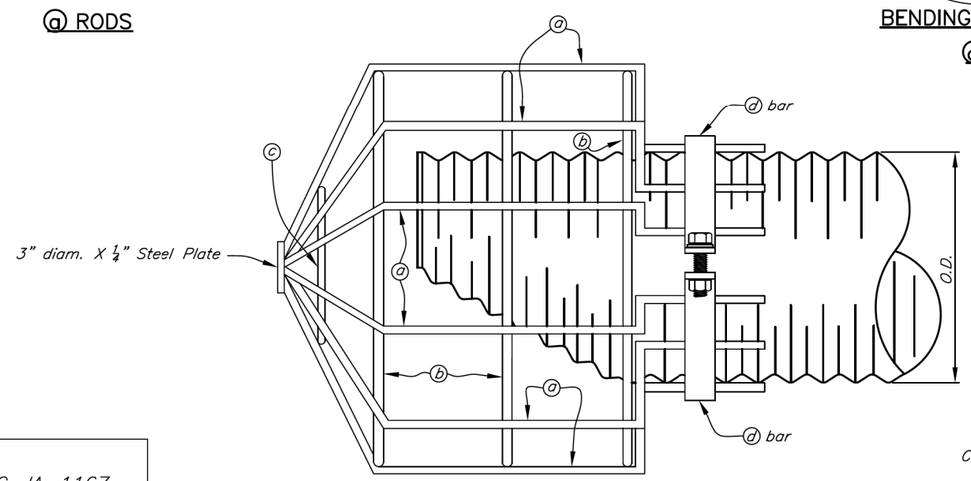

ELEVATION

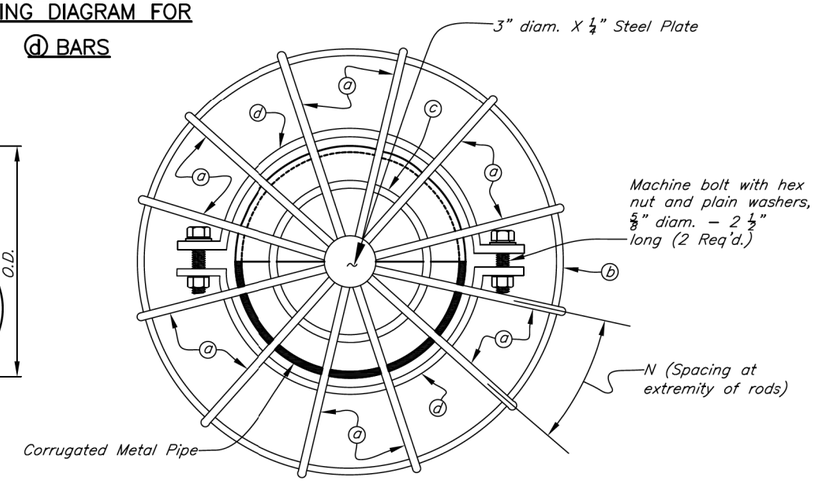

END ELEVATION

STANDARD DWG. IA–1167

DATE Oct. 2012 | PAGE 1 OF 1

Date
Designed
Drawn
Checked
Approved

TRASH RACK FOR
CORRUGATED METAL PIPE
CANOPY INLET

United States Department of Agriculture
Natural Resources Conservation Service

File No.

Drawing No.

Sheet of

CONSULTANT:

IOWA DEPARTMENT OF NATURAL RESOURCES
ENGINEERING SERVICES - WALLACE BUILDING
502 E. 9TH ST., DES MOINES, IA 50319-0034

TRASH RACK DETAILS

SEDIMENTATION PONDS AT:
LAKE MIAMI WMA
MONROE COUNTY

NO.	BY / DATE	REVISION

DRAWN BY:
PROJECT NUMBER: 15-05-68-01
CHK'D BY:
DATE:
SHEET No: B.01

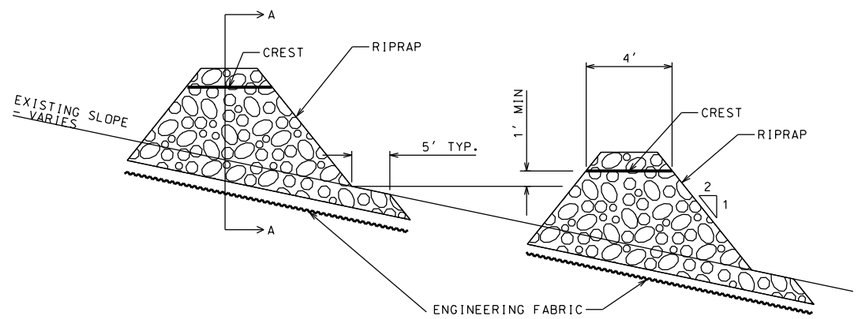

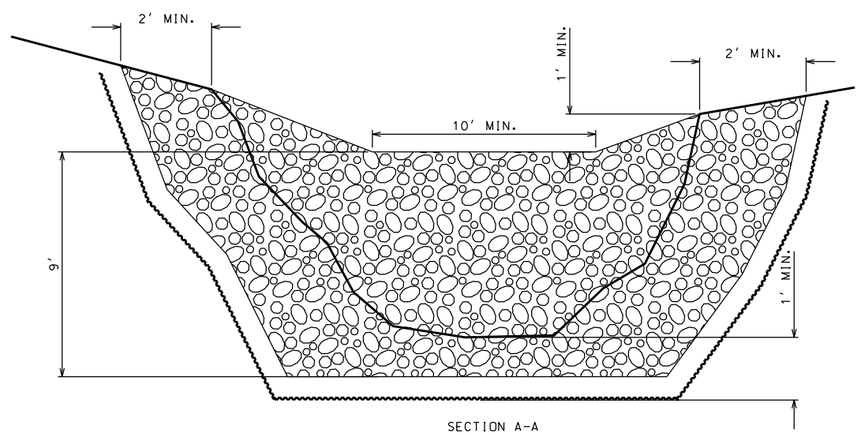

ROCK CHECK DAM DETAIL

NOT TO SCALE

CONSULTANT:

IOWA DEPARTMENT OF NATURAL RESOURCES

ENGINEERING SERVICES - WALLACE BUILDING
502 E. 9TH ST., DES MOINES, IA 50319-0034

ROCK CHECK DAM DETAIL

SEDIMENTATION PONDS AT:

LAKE MIAMI WMA

MONROE COUNTY

NO.	BY / DATE	REVISION

DRAWN BY: PROJECT NUMBER: 15-05-68-01

CHK'D BY: DATE:

SHEET No: **B.02**

ESTIMATED PROJECT QUANTITIES

ITEM NO.	ITEM	UNIT	TOTAL
1	MOBILIZATION	LS	1
2	6" DIA. SMOOTH STEEL PIPE	LF	469
3	12" DIA. SMOOTH STEEL PIPE	LF	142
4	TRASH RACK / BAR GUARD ASMBLY (6")	EA	2
5	TRASH RACK / BAR GUARD ASMBLY (12")	EA	1
6	5'X5'x1/4" ANTISEEP	EA	21
7	EARTHFILL	CY	59711
8	CORE TRENCH	CY	2854
9	SEED & MULCH	AC	3.5
10	CLEARING & GRUBBING	AC	4
11	6" STRIPPING	CY	8737
	Alternate #1 - Site 5		
12	6" DIA. SMOOTH STEEL PIPE	LF	177
13	TRASH RACK / BAR GUARD ASMBLY (6")	EA	1
14	5'X5'x1/4" ANTISEEP	EA	5
15	EARTHWORK/FILL/GRADE	CY	34071
16	CORE TRENCH	CY	1346
17	SEED & MULCH	AC	1.5
18	CLEARING & GRUBBING	AC	7
19	6" STRIPPING	CY	3630
	Alternate #2 - Site 6		
20	RIPRAP	Tons	3266
21	ENGINEERING FABRIC	SY	546

ESTIMATE REFERENCE INFORMATION

ITEM NO.	DESCRIPTION
7	The plan quantity includes 30% increase for shrinkage.
8	The plan quantity includes 30% increase for shrinkage.
15	The plan quantity includes 30% increase for shrinkage.
16	The plan quantity includes 30% increase for shrinkage.

GENERAL NOTES

Verify actual locations and elevations with DNR Engineer.

All work shall conform to and be performed in accordance with all applicable codes and ordinances.

The contractor shall visit the site and inspect the project area and thoroughly familiarize themselves with the actual job conditions prior to bidding and the start of work. Failure to visit the project site shall not relieve the contractor from performing the work in accordance to the plans, specification, special provisions and contract.

The contractor shall verify, at the site, all dimensions and conditions shown on the plans and shall notify the DNR Engineer of any discrepancies, omissions, and/or conflicts prior to proceeding with the work.

It shall be the contractor's responsibility to provide waste areas or disposal sites for excess material (excavated material or broken concrete) which is not desirable to be incorporated into the work involved on this project. No payment for overhaul will be allowed for material hauled to these sites. No material shall be placed within the right-of-way, unless specifically stated in the plans or approved by the DNR Engineer.

The contractor shall not disturb desirable grass areas and desirable trees outside the construction limits. The contractor will not be permitted to park or service vehicles and equipment or use these areas for storage of materials. Storage, parking and service areas will be subject to the approval of the DNR Engineer.

Where utilities and fixtures are shown as Existing on the plans or encountered within the construction area, it shall be the responsibility of the contractor to notify the DNR Engineer of those utilities prior to the beginning of any construction. The contractor shall be afforded access to these facilities for necessary modification of services. Underground facilities, structures and utilities have been plotted from available surveys and records and therefore their locations must be considered approximate only. It is possible there may be others, the existence of which is presently not known or shown. It is the contractor's responsibility to determine their existence and exact location and to avoid damage thereto. No claims for additional compensation will be allowed to the contractor for any interference or delay caused by such work.

The contractor shall shape graded area to maintain surface drainage. All elevations are to finish grade.

The contractor is expected to have materials, equipment, and labor available on a daily basis to install and maintain erosion control features on the project. This may involve seeding, silt fence, rock ditch checks, silt basins or silt dikes.

CONSULTANT:

IOWA DEPARTMENT OF NATURAL RESOURCES
ENGINEERING SERVICES - WALLACE BUILDING
502 E. 9TH ST., DES MOINES, IA 50319-0034

QUANTITIES AND GENERAL INFORMATION

SEDIMENTATION PONDS AT:
LAKE MIAMI WMA
MONROE COUNTY

NO.	BY / DATE	REVISION

DRAWN BY: PROJECT NUMBER: 15-05-68-01
CHK'D BY: DATE:
SHEET No: C.01

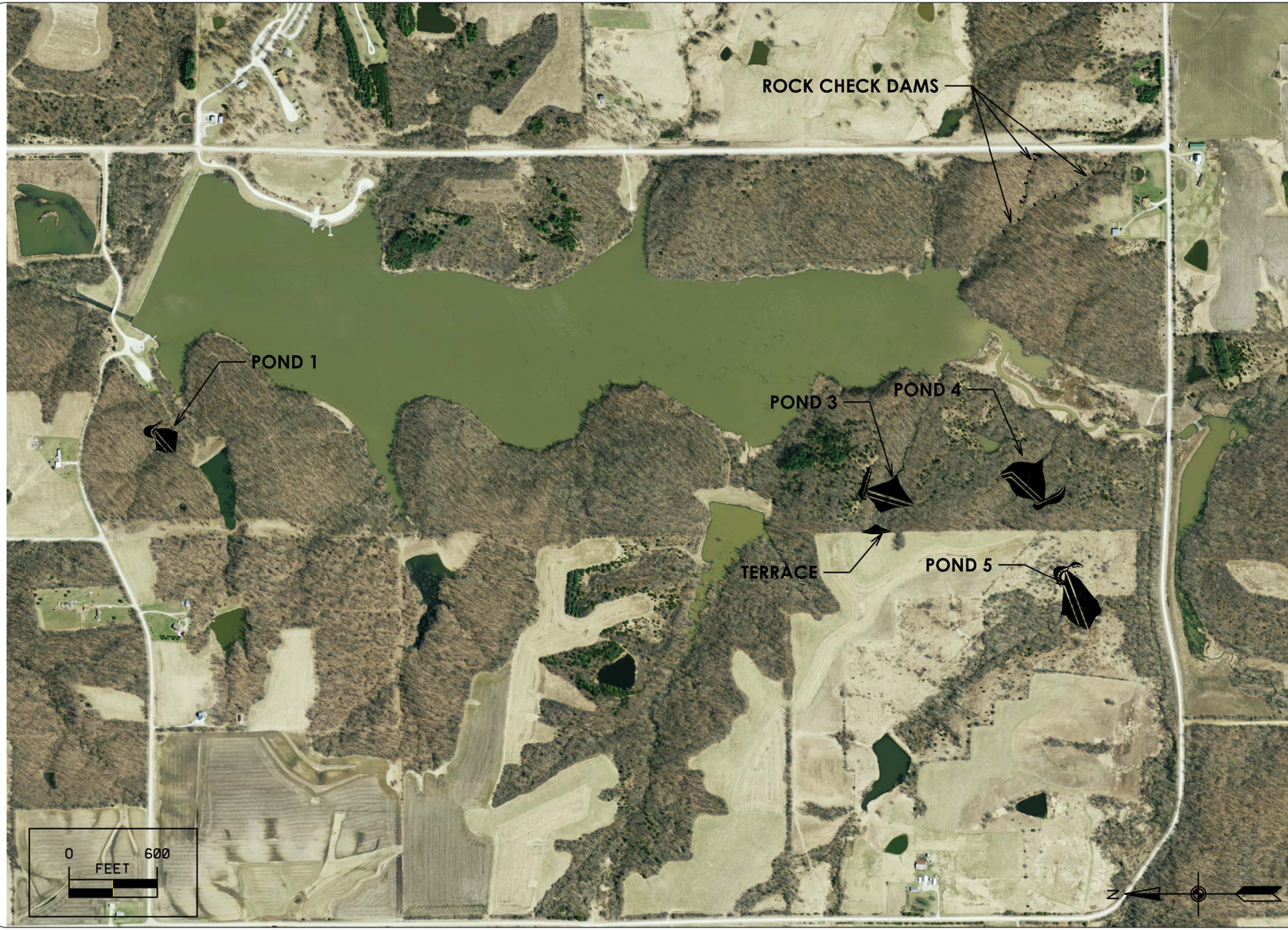

CONSULTANT:

IOWA DEPARTMENT OF NATURAL RESOURCES

ENGINEERING SERVICES - WALLACE BUILING
502 E. 9TH ST., DES MOINES, IA 50319-0034

OVERALL SITE PLAN

SEDIMENTATION PONDS AT:

LAKE MIAMI WMA

MONROE COUNTY

NO.	BY / DATE	REVISION

DRAWN BY:

PROJECT NUMBER: 15-05-68-01

CHK'D BY:

DATE:

SHEET No: **D.01**

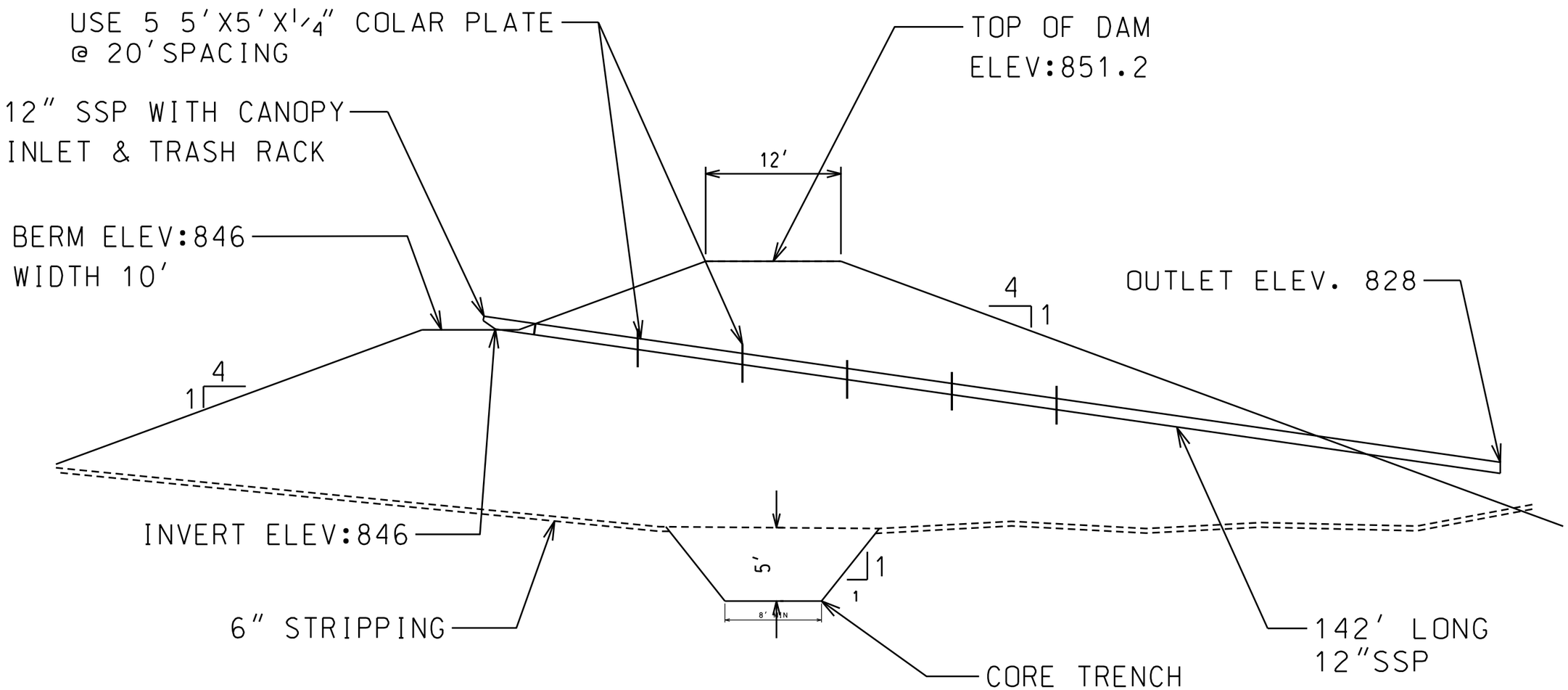

CROSS-SECTION OF DAM

NOT TO SCALE

CONSULTANT:

IOWA DEPARTMENT OF NATURAL RESOURCES

ENGINEERING SERVICES - WALLACE BUILDING
502 E. 9TH ST., DES MOINES, IA 50319-0034

POND 1 CROSS SECTION

SEDIMENTATION PONDS AT:
LAKE MIAMI WMA

MONROE COUNTY

NO.	BY / DATE	REVISION

DRAWN BY:
PROJECT NUMBER: 15-05-68-01
CHK'D BY:
DATE:
SHEET No: D.02

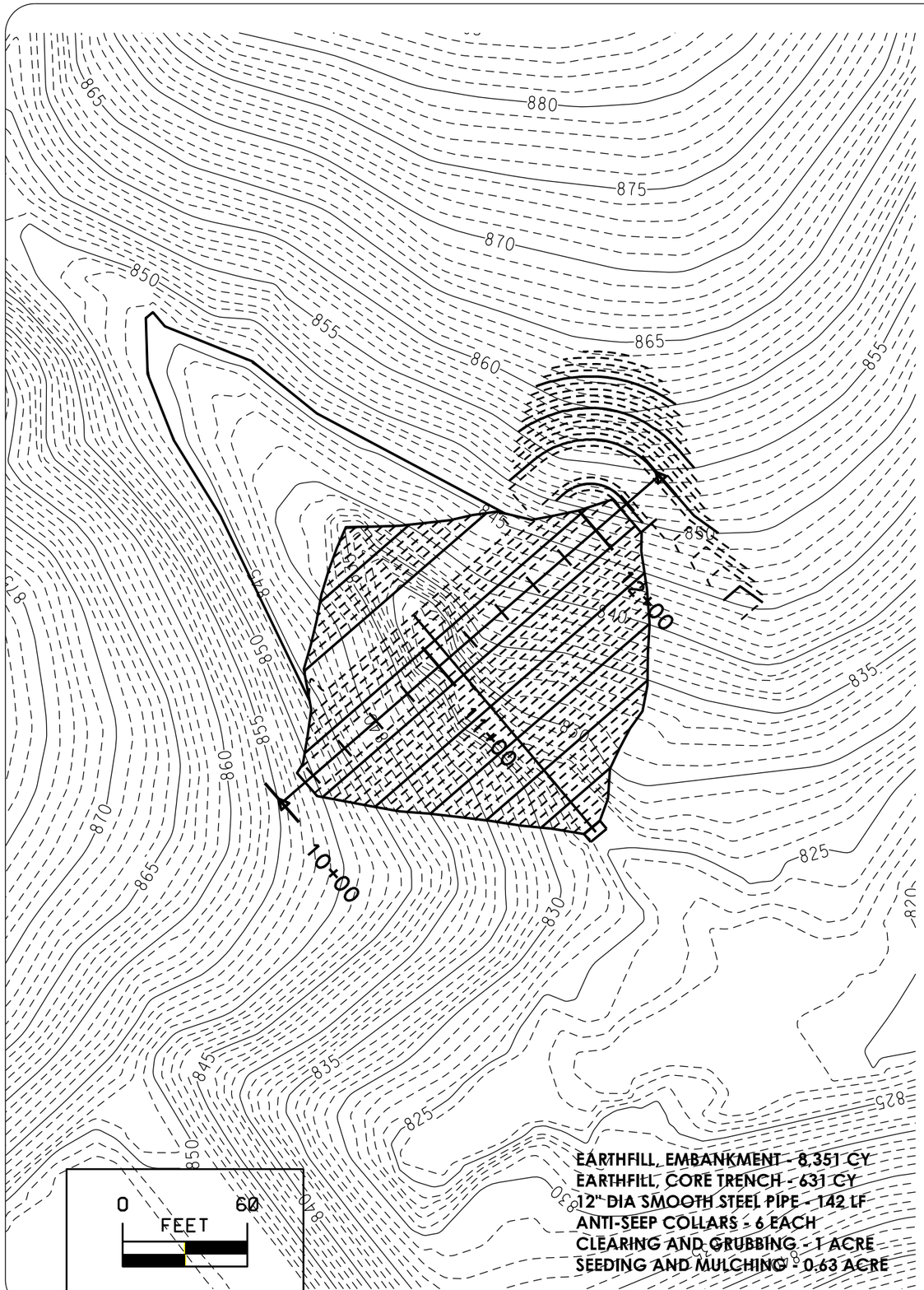

EARTHFILL, EMBANKMENT - 8,351 CY
EARTHFILL, CORE TRENCH - 631 CY
12" DIA SMOOTH STEEL PIPE - 142 LF
ANTI-SEEP COLLARS - 6 EACH
CLEARING AND GRUBBING - 1 ACRE
SEEDING AND MULCHING - 0.63 ACRE

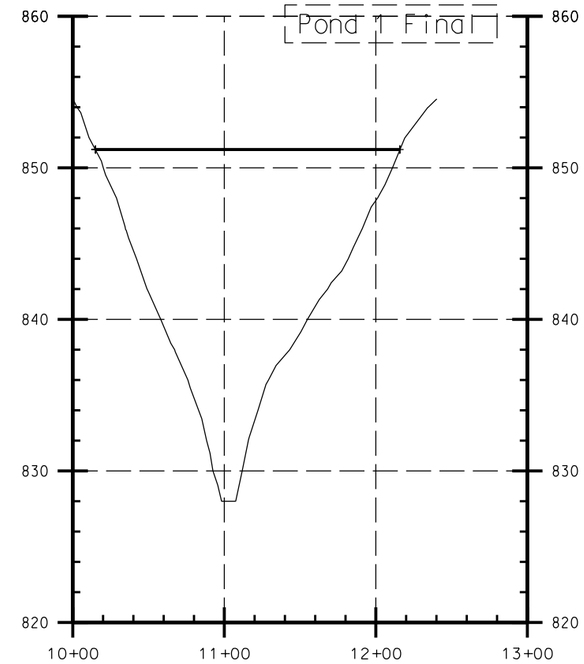

LINE	SURFACE	OFFSET
---	Lidar Mike	0.00

Scaled 10.0000 Times Ver.
Scaled 1.0000 Times Hor.

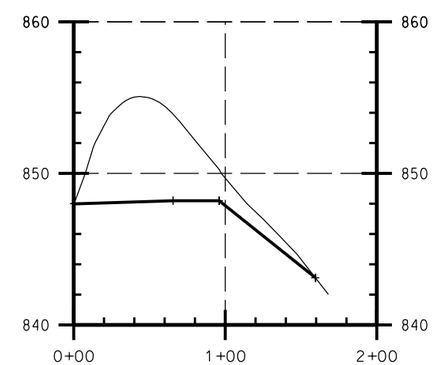

LINE	SURFACE	OFFSET
---	Lidar Mike	0.00

Scaled 10.0000 Times Ver.
Scaled 1.0000 Times Hor.

N

CONSULTANT:

IOWA DEPARTMENT OF NATURAL RESOURCES

ENGINEERING SERVICES - WALLACE BUILDING
502 E. 9TH ST., DES MOINES, IA 50319-0034

POND 1 PLAN AND PROFILE

SEDIMENTATION PONDS AT:
LAKE MIAMI WMA
MONROE COUNTY

NO.	BY / DATE	REVISION

DRAWN BY:
PROJECT NUMBER: 15-05-68-01
CHK'D BY:
DATE:
SHEET No: **D.03**

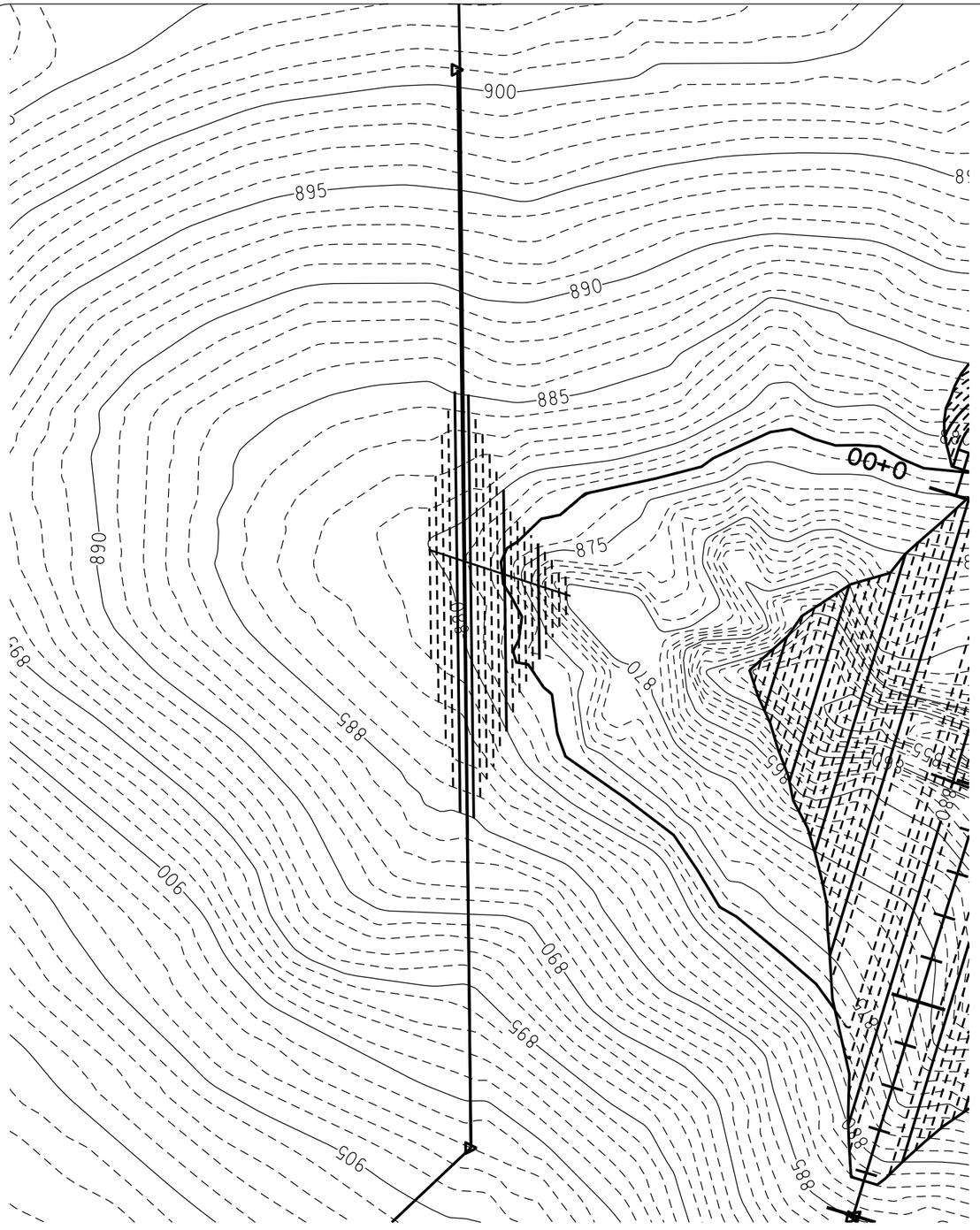

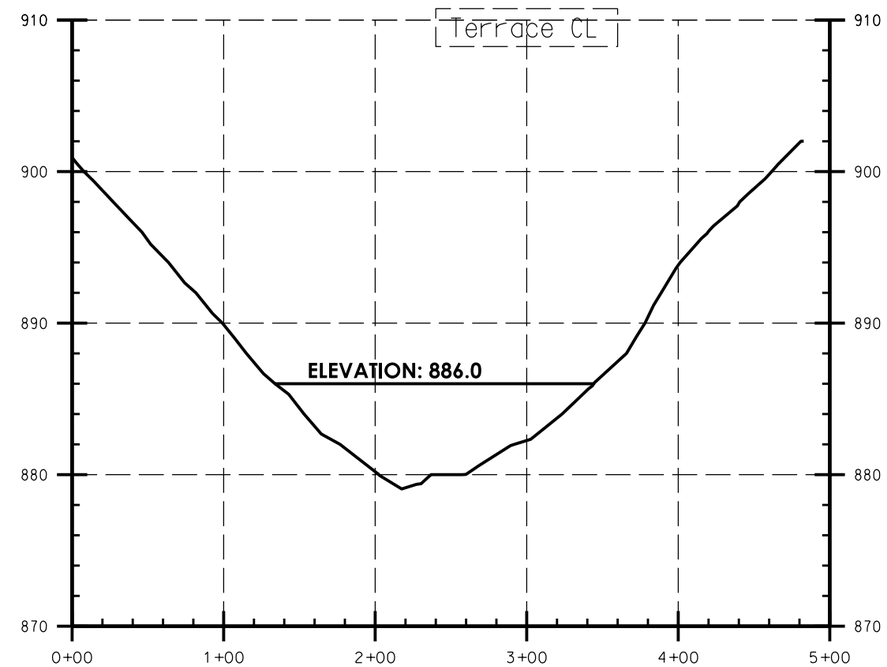

LINE	SURFACE	OFFSET
	Lidar Mike	0.00
	Terrace2	0.00

Scaled 10.0000 Times Ver.
Scaled 1.0000 Times Hor.

NOTE:
TERRACE SHALL BE CONSTRUCTED WITH 3:1 SIDESLOPES

N

0 60
FEET

EARTHFILL, EMBANKMENT - 1,004 CY
6" PERF TILE W/ 12" HICKENBOTTOM STYLE INTAKE - 70 LF
CLEARING AND GRUBBING - 0.2 ACRE
SEEDING AND MULCHING - 0.2 ACRE

CONSULTANT:

IOWA DEPARTMENT OF NATURAL RESOURCES

ENGINEERING SERVICES - WALLACE BUILDING
502 E. 9TH ST., DES MOINES, IA 50319-0034

TERRACE PLAN AND PROFILE

SEDIMENTATION PONDS AT:
LAKE MIAMI WMA
MONROE COUNTY

NO.	BY / DATE	REVISION

DRAWN BY:
PROJECT NUMBER: 15-05-68-01
CHK'D BY:
DATE:
SHEET No: **D.04**

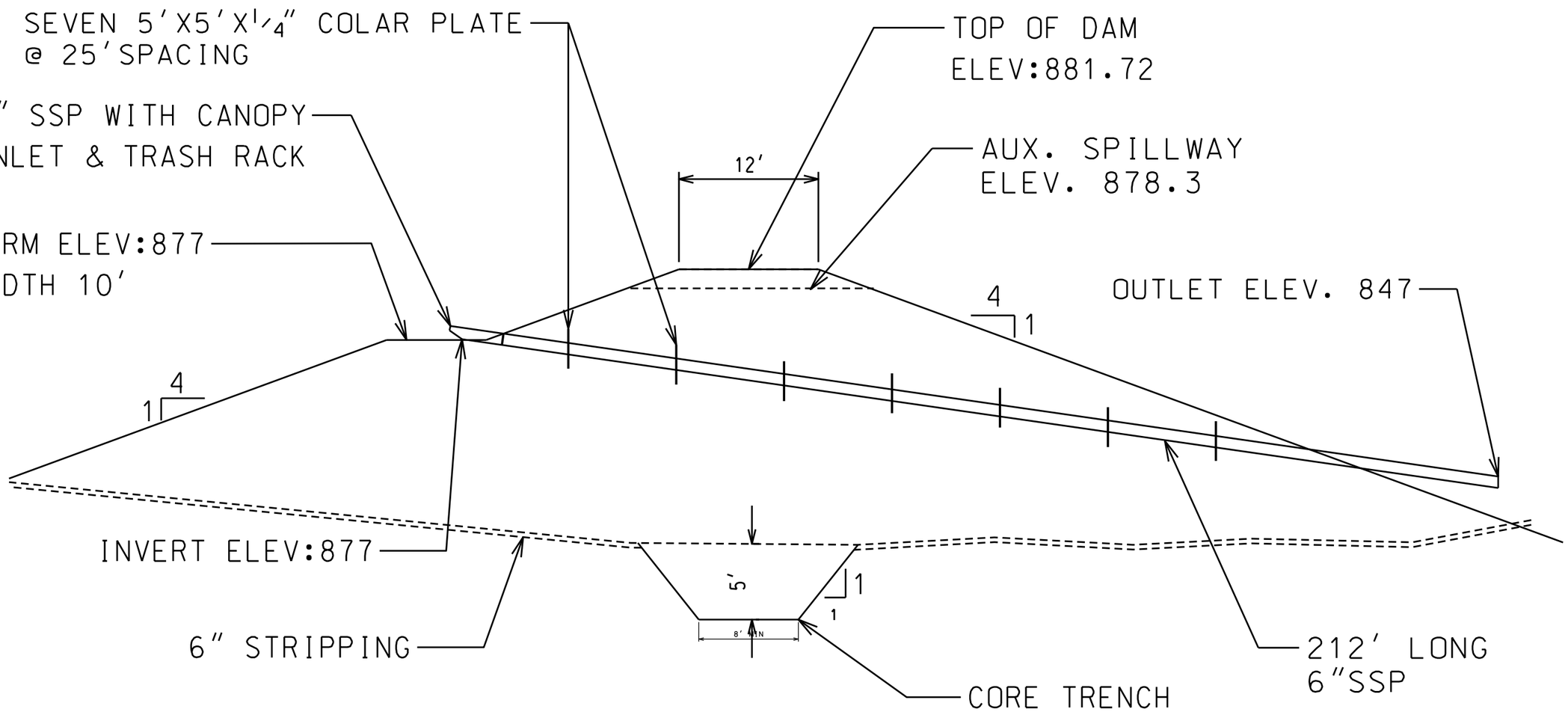

CROSS-SECTION OF DAM

NOT TO SCALE

CONSULTANT:

IOWA DEPARTMENT OF NATURAL RESOURCES

ENGINEERING SERVICES - WALLACE BUILING
502 E. 9TH ST., DES MOINES, IA 50319-0034

POND 3 CROSS SECTION

SEDIMENTATION PONDS AT:
LAKE MIAMI WMA

MONROE COUNTY

NO.	BY / DATE	REVISION

DRAWN BY:
PROJECT NUMBER: 15-05-68-01
CHK'D BY:
DATE:
SHEET No: D.05

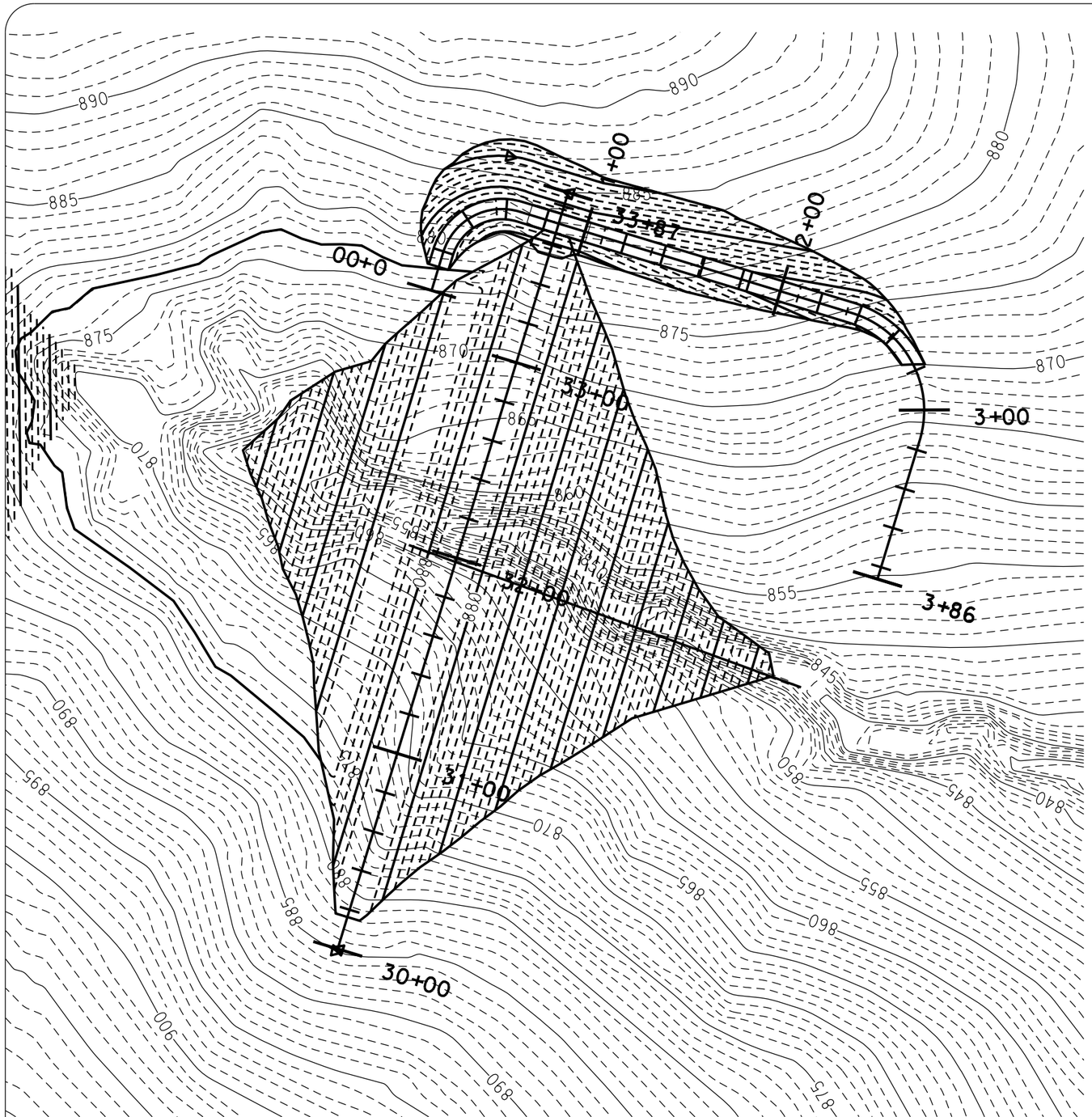

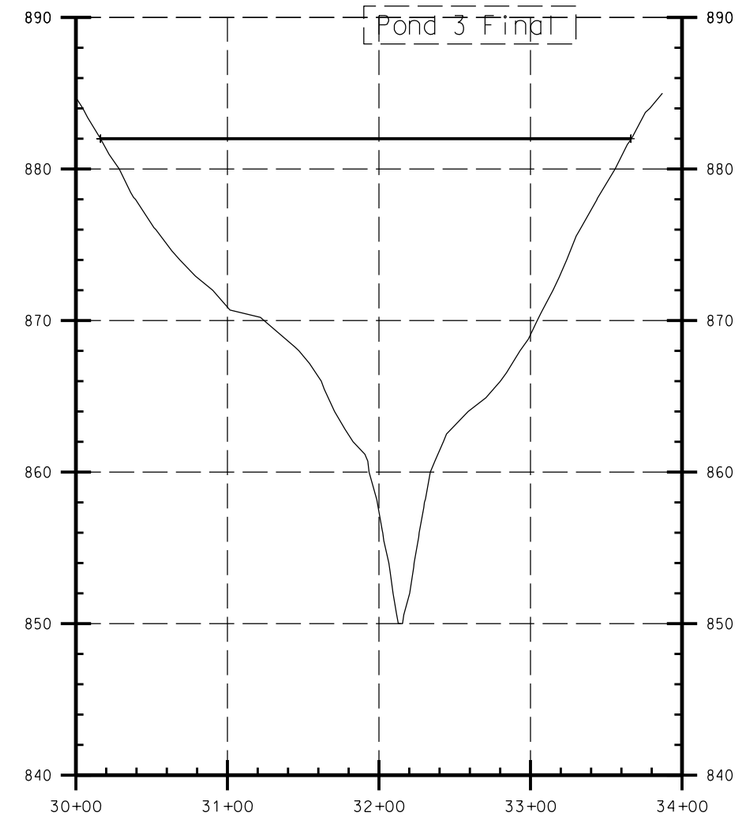

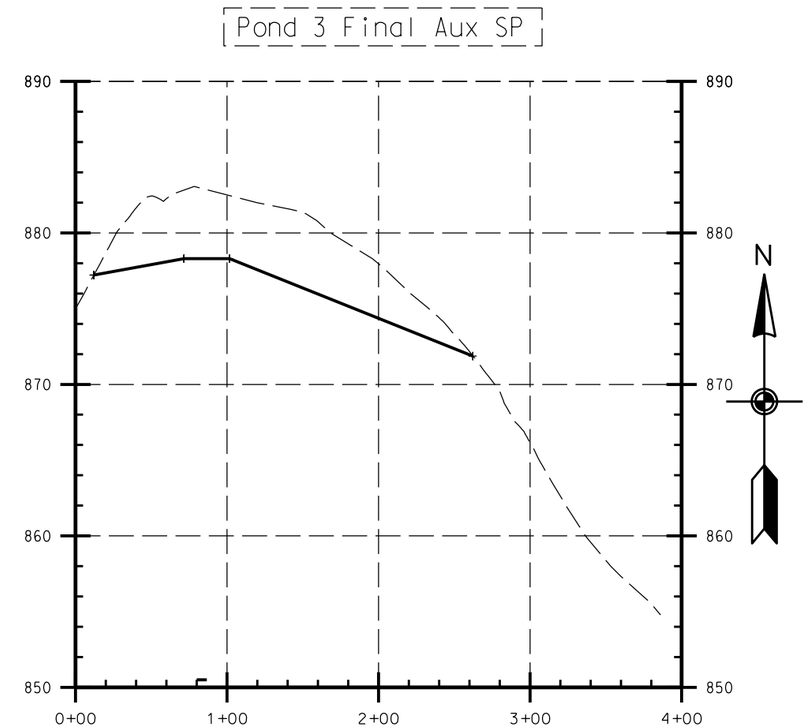

0 60
FEET

EARTHFILL, EMBANKMENT - 20,783 CY
EARTHFILL, CORE TRENCH - 1,096 CY
6" DIA SMOOTH STEEL PIPE - 212 LF
ANTI-SEEP COLLARS - 8 EACH
CLEARING AND GRUBBING - 1.2 ACRE
SEEDING AND MULCHING - 1.4 ACRE

CONSULTANT:

IOWA DEPARTMENT OF NATURAL RESOURCES

ENGINEERING SERVICES - WALLACE BUILDING
502 E. 9TH ST., DES MOINES, IA 50319-0034

POND 3 PLAN AND PROFILE

SEDIMENTATION PONDS AT:
LAKE MIAMI WMA
MONROE COUNTY

NO.	BY / DATE	REVISION

DRAWN BY:
PROJECT NUMBER: 15-05-68-01
CHK'D BY:
DATE:
SHEET No: **D.06**

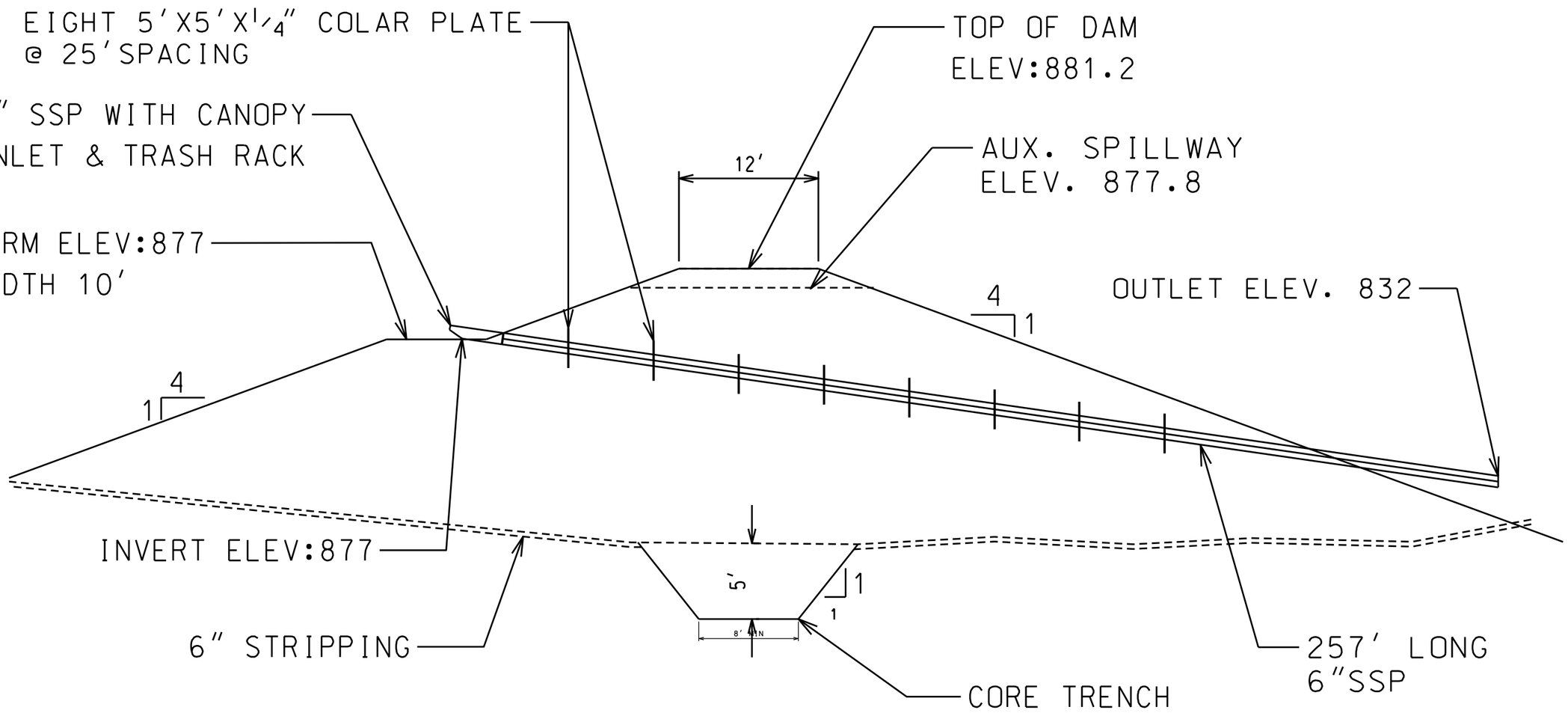

CROSS-SECTION OF DAM

NOT TO SCALE

CONSULTANT:

IOWA DEPARTMENT OF NATURAL RESOURCES

ENGINEERING SERVICES - WALLACE BUILING
502 E. 9TH ST., DES MOINES, IA 50319-0034

POND 4 CROSS SECTION

SEDIMENTATION PONDS AT:
LAKE MIAMI WMA

MONROE COUNTY

NO.	BY / DATE	REVISION

DRAWN BY:
PROJECT NUMBER: 15-05-68-01
CHK'D BY:
DATE:
SHEET No: D.07

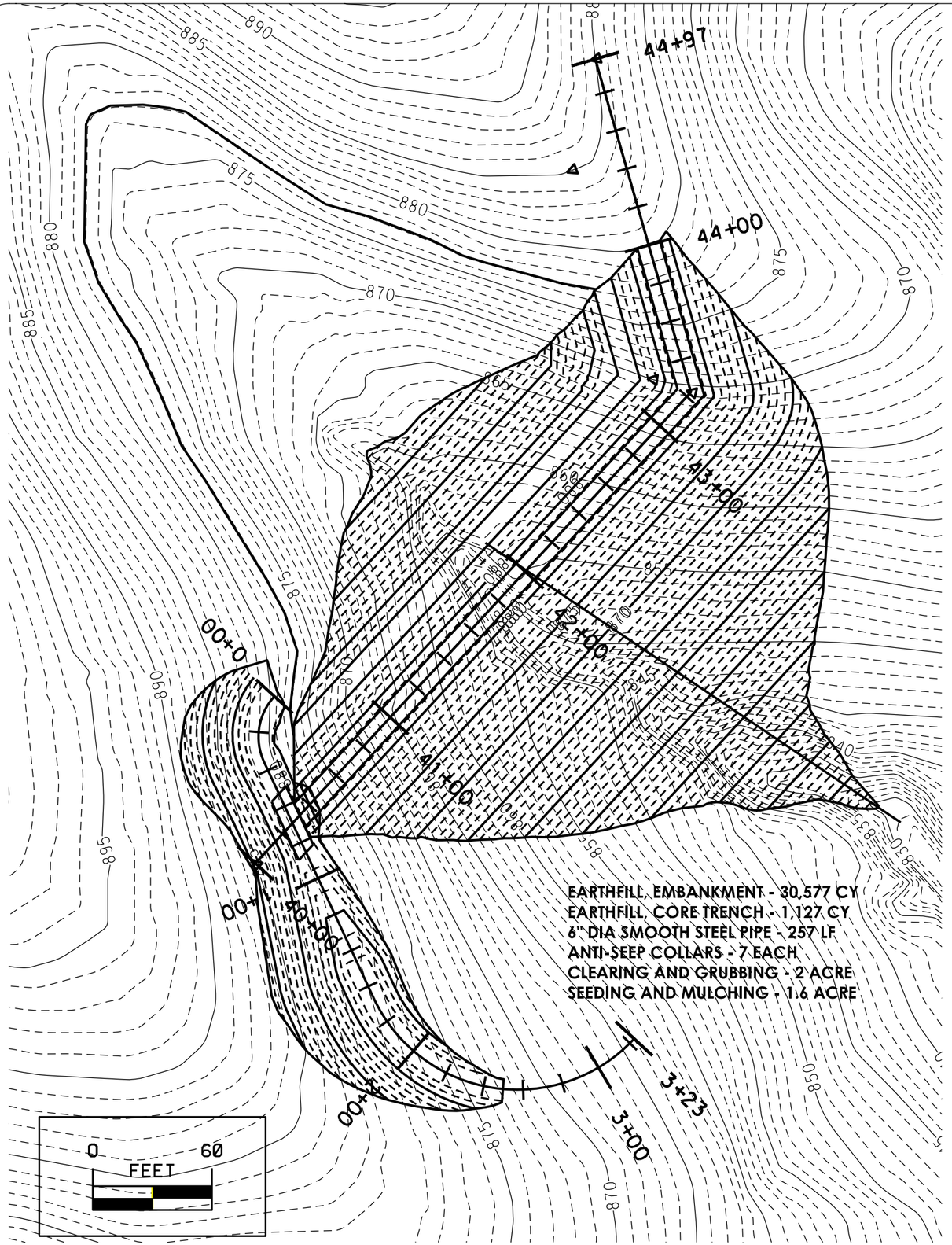

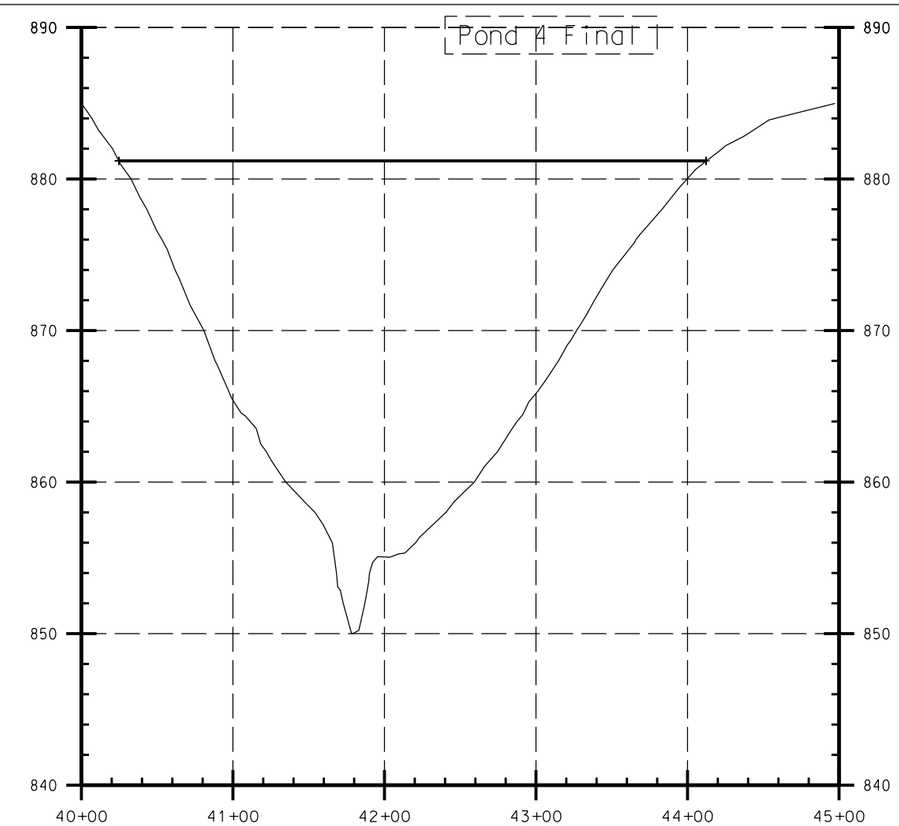

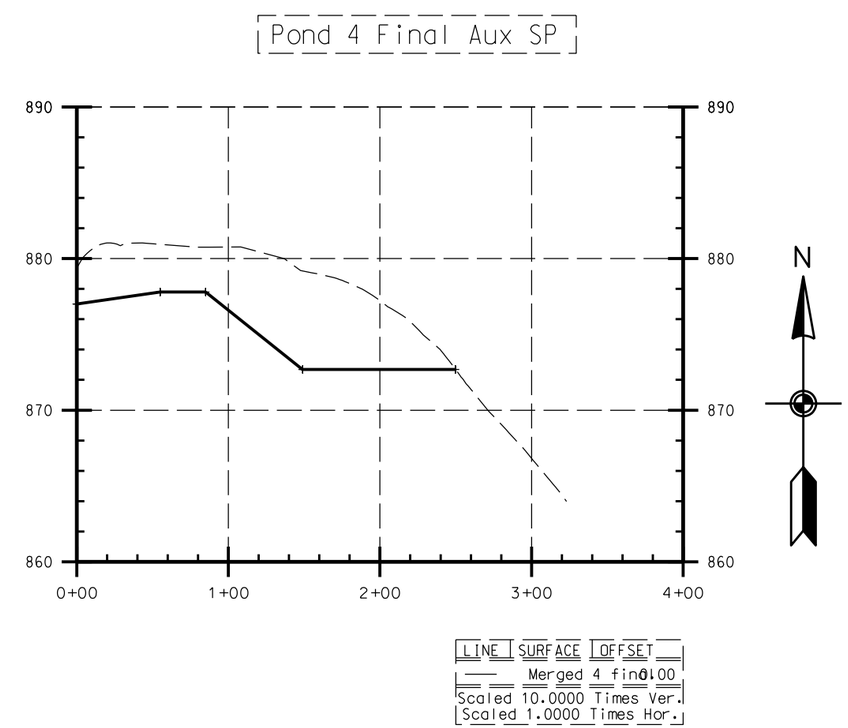

CONSULTANT:

IOWA DEPARTMENT OF NATURAL RESOURCES

ENGINEERING SERVICES - WALLACE BUILDING
502 E. 9TH ST., DES MOINES, IA 50319-0034

POND 4 PLAN AND PROFILE

SEDIMENTATION PONDS AT:

LAKE MIAMI WMA

MONROE COUNTY

NO.	BY / DATE	REVISION

DRAWN BY:

PROJECT NUMBER: 15-05-68-01

CHK'D BY:

DATE:

SHEET No: **D.08**

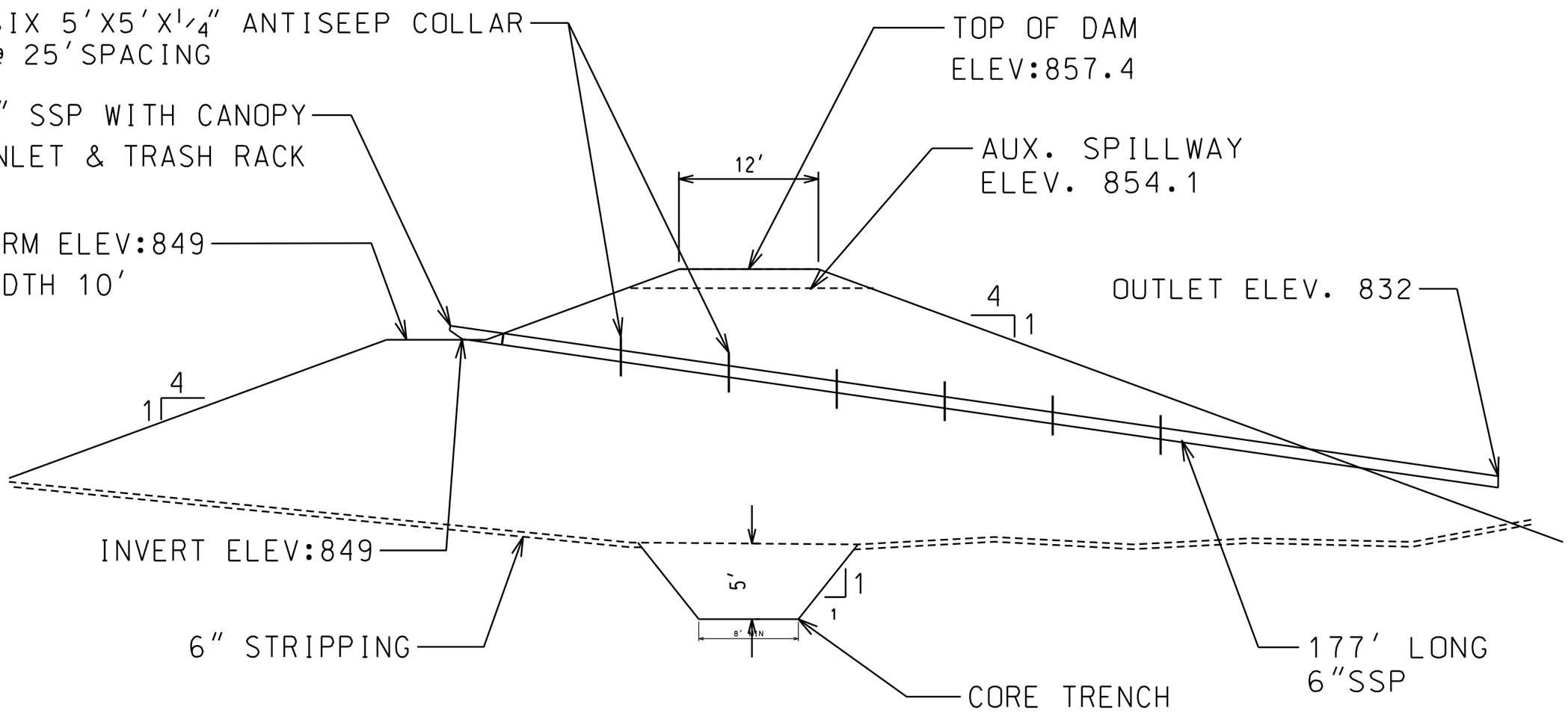

CROSS-SECTION OF DAM

NOT TO SCALE

CONSULTANT:

IOWA DEPARTMENT OF NATURAL RESOURCES

ENGINEERING SERVICES - WALLACE BUILDING
502 E. 9TH ST., DES MOINES, IA 50319-0034

POND 5 CROSS SECTION

SEDIMENTATION PONDS AT:
LAKE MIAMI WMA

MONROE COUNTY

NO.	BY / DATE	REVISION

DRAWN BY:
PROJECT NUMBER: 15-05-68-01
CHK'D BY:
DATE:

SHEET No: D.09

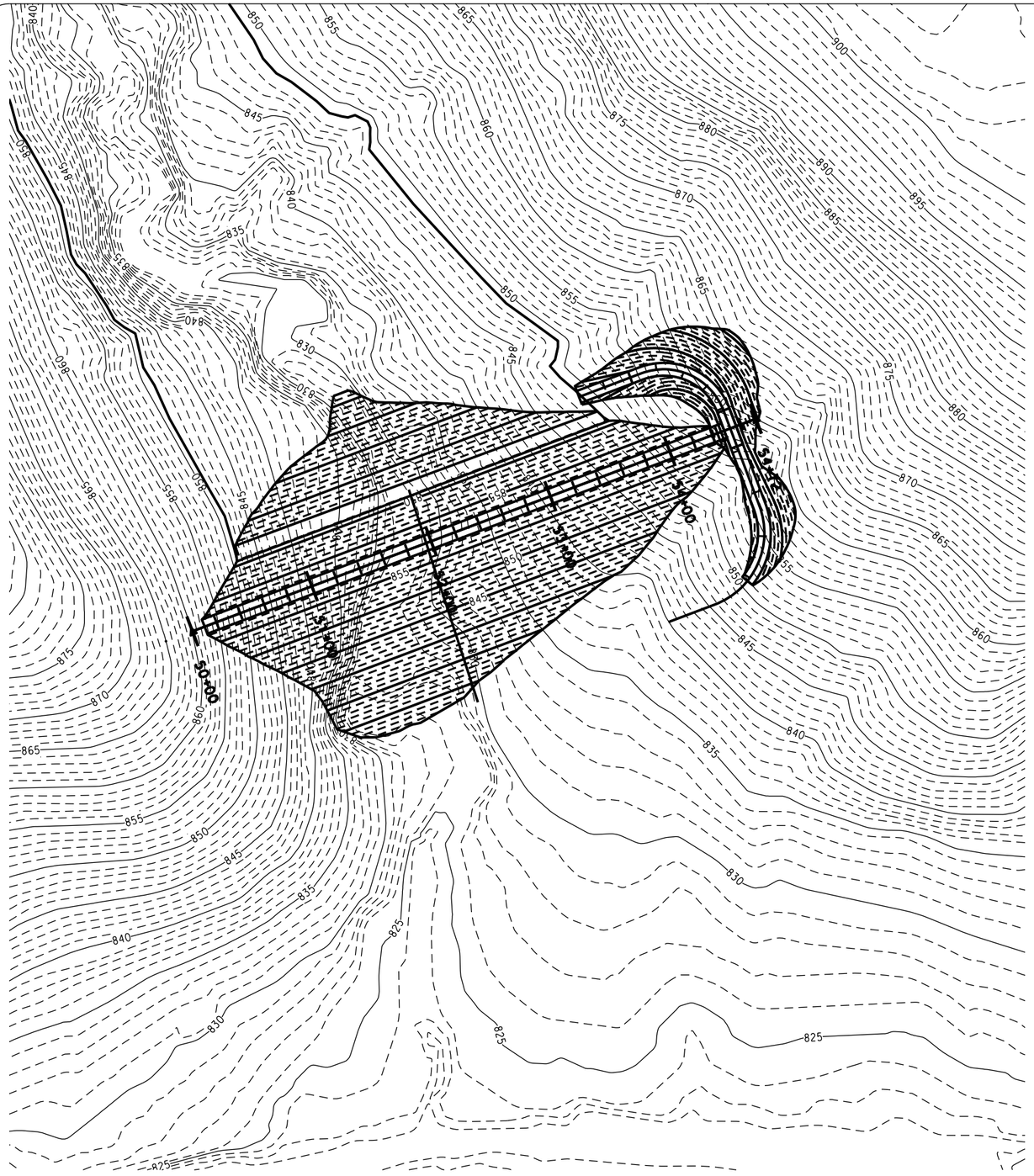

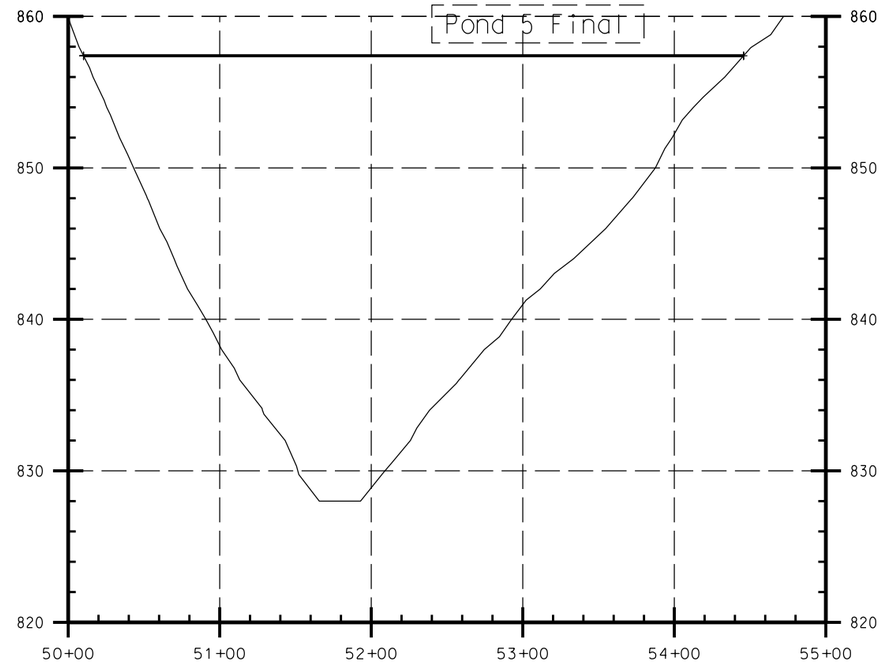

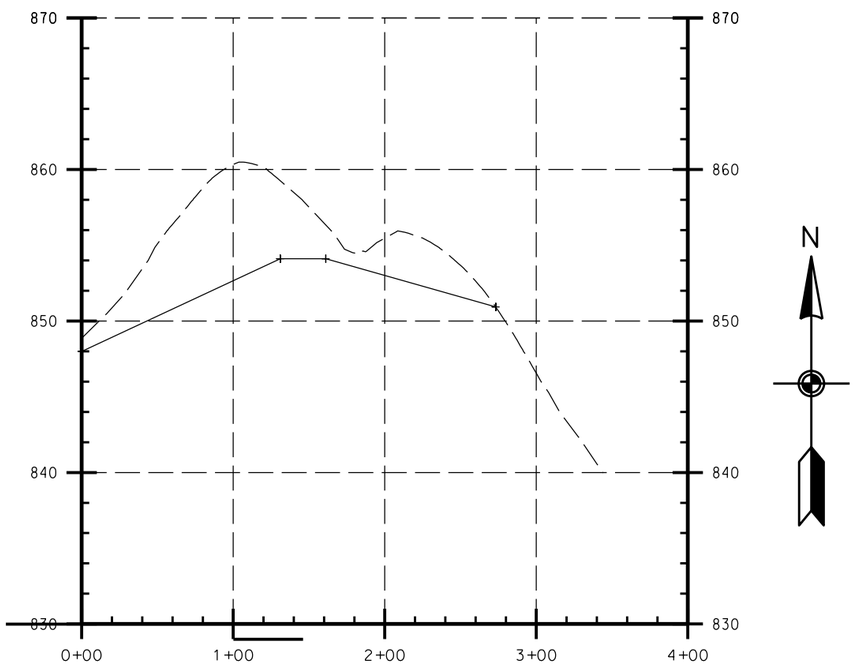

0 60
FEET

EARTHFILL, EMBANKMENT - 34,071CY
EARTHFILL, CORE TRENCH - 1,346 CY
6" DIA SMOOTH STEEL PIPE - 177 LF
ANTI-SEEP COLLARS - 5 EACH
CLEARING AND GRUBBING - 7 ACRE
SEEDING AND MULCHING - 1.5 ACRE

CONSULTANT:

IOWA DEPARTMENT OF NATURAL RESOURCES

ENGINEERING SERVICES - WALLACE BUILDING
502 E. 9TH ST., DES MOINES, IA 50319-0034

POND 5 PLAN AND PROFILE

SEDIMENTATION PONDS AT:
LAKE MIAMI WMA
MONROE COUNTY

NO:	BY DATE	REVISION

DRAWN BY:
PROJECT NUMBER: 15-05-68-01
CHK'D BY:
DATE:
SHEET No: **D.10**

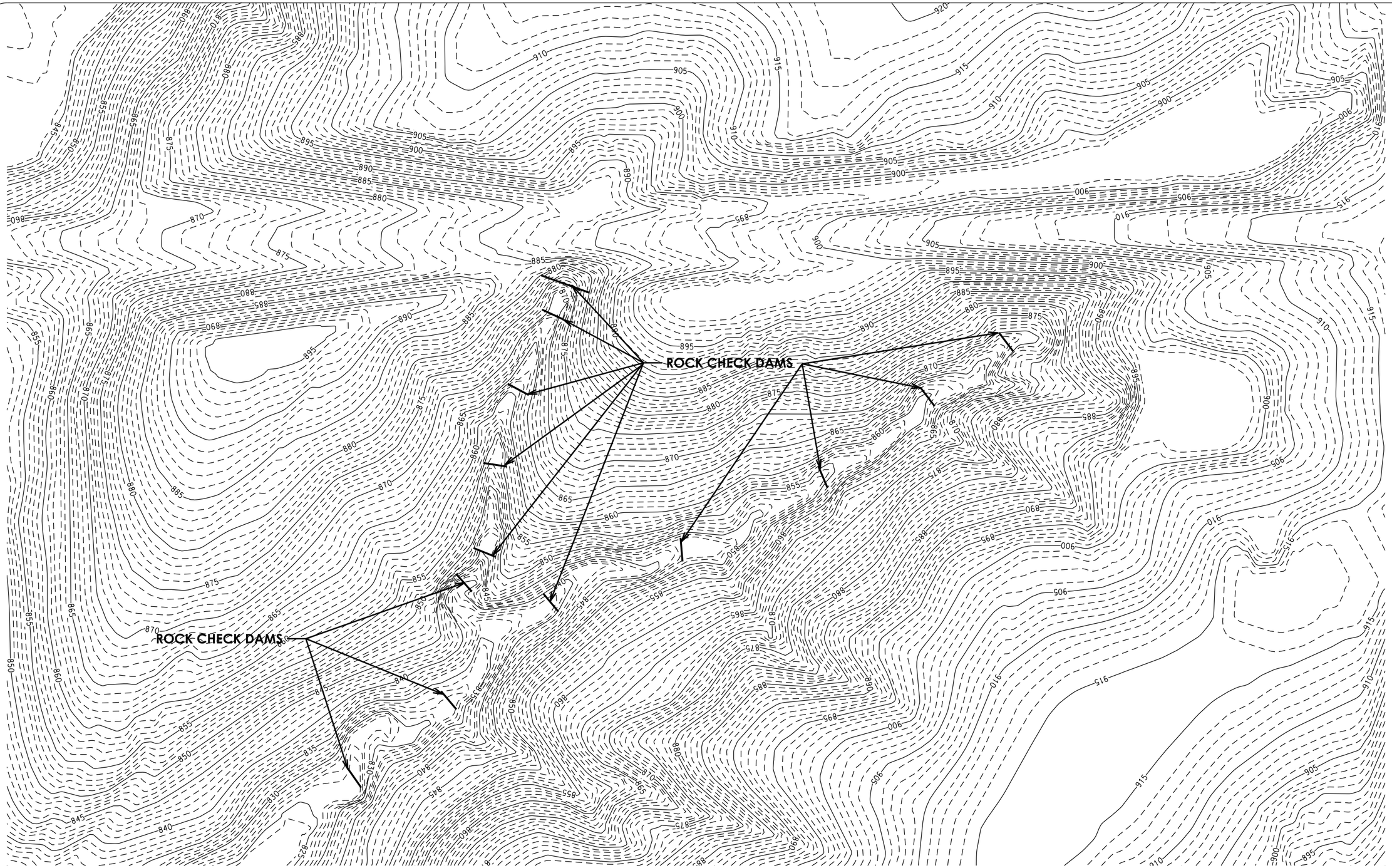

0 100
FEET

CONSTRUCT 13 ROCK CHECK DAMS
RIPRAP - 3,266 TONS
ENGINEERING FABRIC - 546 SY

N

CONSULTANT:

IOWA DEPARTMENT OF NATURAL RESOURCES

ENGINEERING SERVICES - WALLACE BUILDING
502 E. 9TH ST., DES MOINES, IA 50319-0034

SITE 6

SEDIMENTATION PONDS AT:

LAKE MIAMI WMA

MONROE COUNTY

NO.	BY / DATE	REVISION

DRAWN BY:
PROJECT NUMBER: 15-05-68-01
CHK'D BY:
DATE:
SHEET No: **D.11**

Time and Date of Letting **11:00 AM, August 18, 2016**

PROPOSAL

Project No. **15-05-68-01**

Project Description and Location

SEDIMENT PONDS
LAKE MIAMI WMA
MONROE COUNTY, Iowa

Proposal of: _____
(Name of Bidder)

Located at: _____ ( ) _____
(Address) (Area) (Telephone)

Amount of Proposal Guarantee	Specified completion date or Number of Working Days	Approx. or Specified Starting Date or Number of Working Days	Liquidated Damages Per Day
$10,000	MAY 15, 2017	OCTOBER 1, 2016	$300.00

The undersigned hereby agrees, if awarded the contract, to execute the proposed contract and to furnish an approved performance bond in a amount not less than 100 percent of the contract award within 30 days after the date of approval of award of the contract, and to provide all labor, materials, and equipment required to complete the project designated above, for the price hereinafter set forth, in strict compliance with the contract documents prepared by the Iowa Department of Natural Resources.

The undersigned agrees, if awarded the contract, to commence the work within a reasonable time after the preconstruction conference or by the specific starting date, if so specified, and to complete the work within the contract period, or to pay liquidated damages in the amount stipulated herein for each calendar day the work remains uncompleted after the expiration of the contract period or any authorized reduction thereof.

A proposal guarantee in the amount stipulated herein is included with this proposal, to be forfeited to the Iowa Department of Natural Resources if the undersigned fails to execute the contract and furnish an approved performance bond, if awarded the contract.

By virtue of statutory authority, preference will be given to products and provisions grown and coal produced within the state of Iowa, and also, a resident bidder shall be allowed a preference against a nonresident bidder from a state or foreign country which gives or requires a preference to bidders from that state or foreign country on projects in which there are no federal funds involved.

BY

_____ (Iowa Contractor Registration No.)

_____ (Signed) (Date)

_____ (FID/EIN/SSN)

_____ (Phone Number) (Fax Number)

_____ (Email Address)

THE FOLLOWING AFFIDAVIT MUST BE COMPLETED AND NOTORIZED, OR THIS BID WILL BE REJECTED.

- AFFIDAVIT-

The signatory. being duly sworn, does depose and say that the undersigned is an authorized representative of:

_____
(Name of Firm)

Located at: _____

Hereinafter referred to as “Bidder” and does hereby affirm to have personal knowledge that said bidder has examined the drawings and specifications, carefully prepared the proposal form, and has checked the same in detail before submitting; and that said bidder, or the agents, officers, or employees thereof, have not either directly or indirectly, entered into any agreement, participated in any collusion or fraud, or otherwise taken any action in restraint of free competitive bidding in connection with this bid.

_____ (Signed)

_____ Day of _____ , 20 _____

_____ (Signed Notary)

My Commission Expires _____ , 20 _____

SCHEDULE OF PRICES

Project Description and Location

SEDIMENT PONDS, LAKE MIAMI WMA, MONROE COUNTY

Name of Bidder

THE "UNIT PRICE" AND "AMOUNT" COLUMNS MUST BE FILLED IN FOR THIS PROPOSAL TO BE CONSIDERED COMPLETE. IF THERE IS A DISCREPANCY BETWEEN UNIT BID PRICES, EXTENSIONS, OR TOTAL AMOUNTS OF BID, THE UNIT PRICES SHALL GOVERN.

Item No.	Description	Estimated Quantity	Unit Price	Amount
1	MOBILIZATION	LUMP SUM		
2	6″ DIA. SMOOTH STEEL PIPE	469 LF		
3	12″ DIA. SMOOTH STEEL PIPE	142 LF		
4	TRASH RACK, 6″	2 EACH		
5	TRASH RACK, 12″	1 EACH		
6	5′ X 5′ X ¼″ ANTISEEP COLLAR	21 EACH		
7	EARTHFILL, EMBANKMENT	60,715 CY		
8	EARTHFILL, CORE TRENCH	2,854 CY		
9	SEED & MULCH	3.8 ACRE		
10	CLEARING & GRUBBING	4.4 ACRE		
11	6″ STRIPPING	8,737 CY		
12	6″ Perforated Tile	70 LF		
13	12″ Hickenbottom Style Intake	1 EACH		
	ALTERNATE #1 – SITE			
14	6″ DIA. SMOOTH STEEL PIPE	177 LF		
15	TRASH RACK	1 EACH		
16	5′ X 5′ X ¼″ ANTISEEP COLLAR	5 EACH		
17	EARTHFILL, EMBANKMENT	34071 CY		
18	EARTHFILL, CORE TRENCH	1346 CY		
19	SEED & MULCH	1.5 ACRE		
20	CLEAR & GRUBBING	7 ACRE		
21	6″ STRIPPING	3630 CY		
	ALTERNATE #2			
22	RIPRAP	3266 TONS		

23	ENGINEERING FABRIC	546 SY		
		TOTAL		

Bidder Acknowledges Receipt of Any Issued Addenda Below (Number and Date)
#1 – 8/2/2016
#2 – 8/5/2016